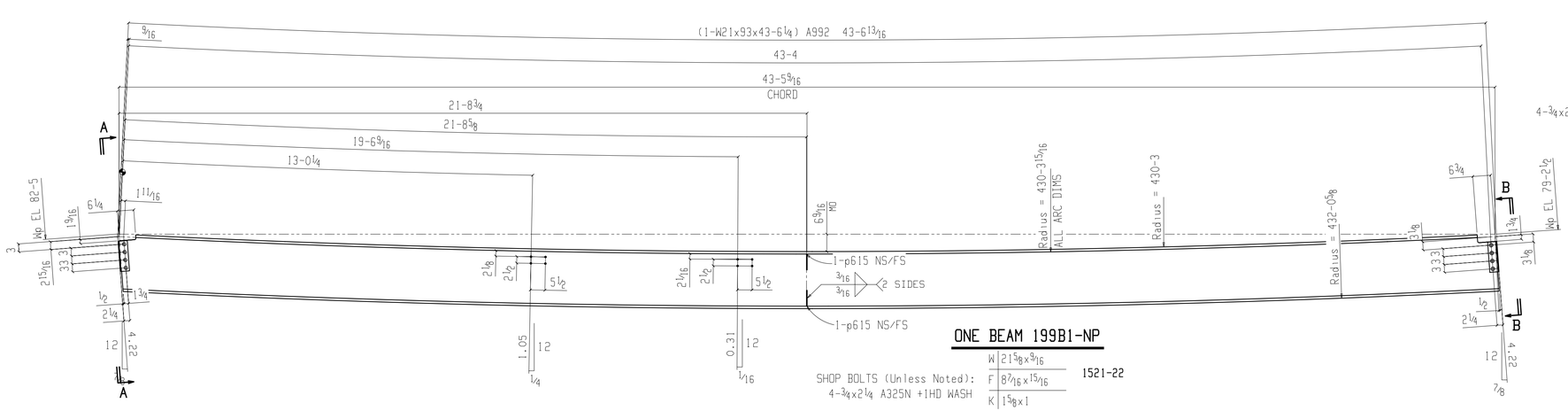

ONE BEAM 199B1-NP

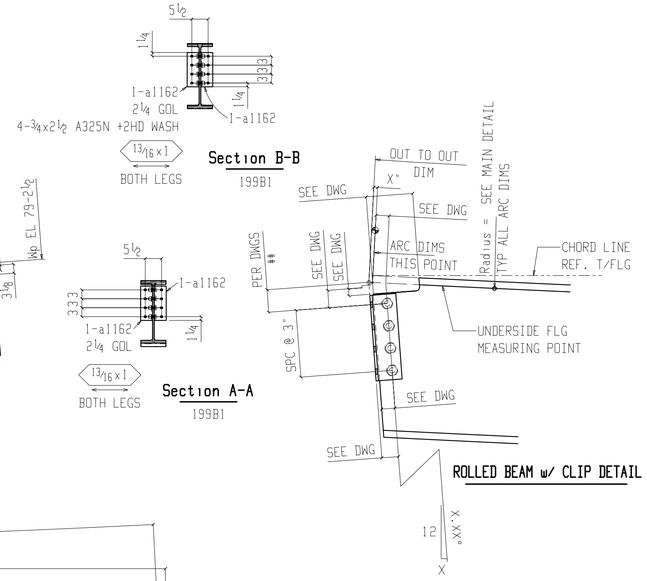

ROLLED BEAM w/ CLIP DETAIL

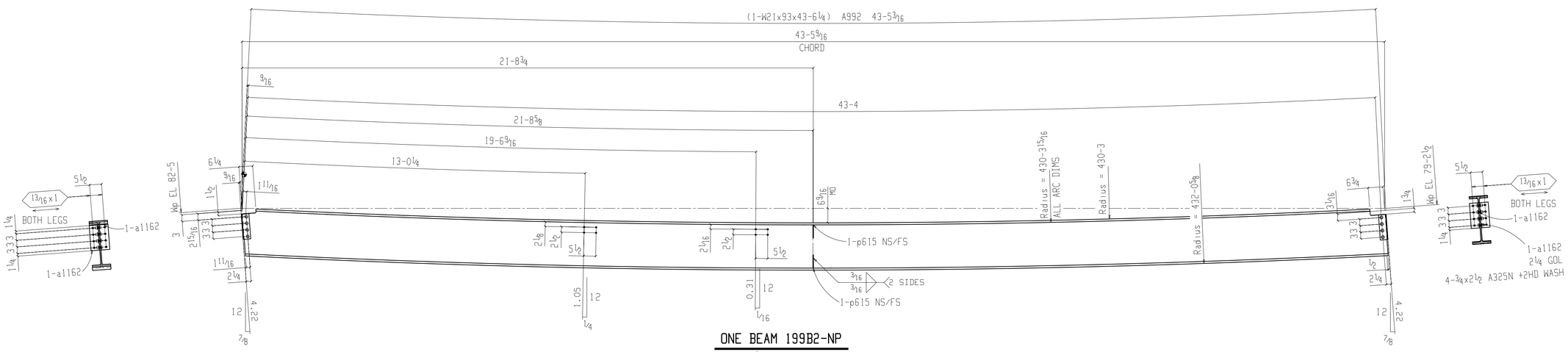

ONE BEAM 199B2-NP

W 21⅝x9/16 1521-22
F 8 7/16x15/16
K 1⅝x1

SHOP BOLTS (Unless Noted):
4-¾x2¼ A325N +1HD WASH

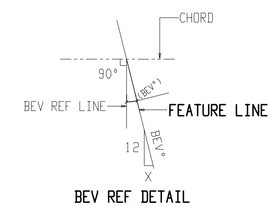

BEV REF DETAIL

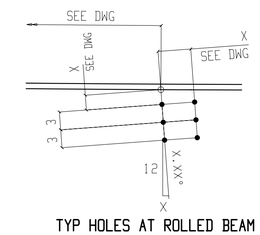

TYP HOLES AT ROLLED BEAM

QTY.	PRINTS FOR	DATE

BILL OF MATERIAL

PC MARK	MINOR MARK	QTY. TOTAL	DESCRIPTION	LENGTH FEET	LENGTH INCHES	STEEL GRADE	REMARKS	WEIGHT EA.	WEIGHT TOTAL
199B1		ONE	BEAM					4093	4093
	199B1	1	W21x93	43	6¼	A992	11-21	4048	4047
	a1162	4	L4x3½x5/16	0	11½	A36		8	30
	p615	4	PL¼x6	0	6	A36		3	10
		4	¾ Dia A325N	0	2½		+2HD WASH	1	3
		4	¾ Dia A325N	0	2¼		+1HD WASH	1	3
			FIELD BOLTS						
		8	TC ¾ Dia A325N	0	2½		+1HD WASH		
		8	TC ¾ Dia A325N	0	2¼		+1HD WASH		
199B2		ONE	BEAM					4093	4093
	199B2	1	W21x93	43	6¼	A992	11-21	4048	4047

BILL OF MATERIAL

PC MARK	MINOR MARK	QTY. TOTAL	DESCRIPTION	LENGTH FEET	LENGTH INCHES	STEEL GRADE	REMARKS	WEIGHT EA.	WEIGHT TOTAL
	a1162	4	L4x3½x5/16	0	11½	A36		8	30
	p615	4	PL¼x6	0	6	A36		3	10
		4	¾ Dia A325N	0	2½		+2HD WASH	1	3
		4	¾ Dia A325N	0	2¼		+1HD WASH	1	3
			FIELD BOLTS						
		8	TC ¾ Dia A325N	0	2½		+1HD WASH		
		8	TC ¾ Dia A325N	0	2¼		+1HD WASH		
		8	TC ¾ Dia A325N	0	2		+1HD WASH		

REV.	DATE	DESCRIPTION
1	12-23-15	RELEASE FOR FABRICATION
0	08-24-15	FOR APPROVAL

MEMBER

HOLES U.N.:	SHOP BOLTS U.N.:	FIELD BOLTS U.N.:	WELDS U.N.:
13/16	¾ A325N	¾ A325N	E70XX LO HYD

PROJECT:

DATE: 08-01-15

DRAWN BY: TL

DESCRIPTION: BEAMS

CHKD BY: VP

ARCH.: Hellmuth,Obata,& Kassabaum,INC.

ENG.: Walter P Moore & Associates, Inc

JOB NO.: 1521

CUSTOMER: SKANSKA USA BUILDING

PROJECT MGR:

SHT. NO.: 199

REV.: 1